Harmsco® Filtration Products
Installation Diagram
Hurricane® 16X170FL Swing Bolt Housing

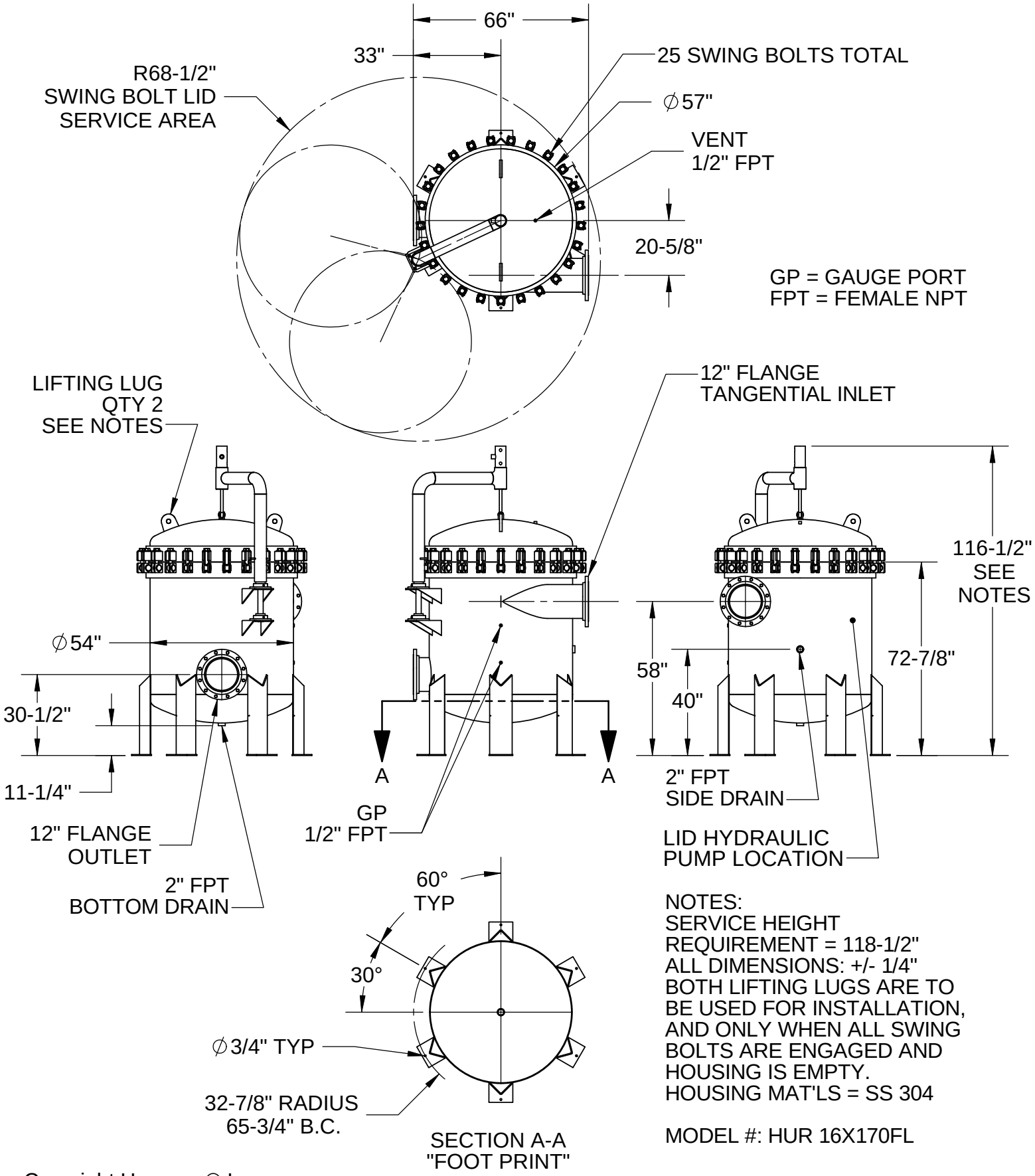

NOTES:
SERVICE HEIGHT
REQUIREMENT = 118-1/2"
ALL DIMENSIONS: +/- 1/4"
BOTH LIFTING LUGS ARE TO
BE USED FOR INSTALLATION,
AND ONLY WHEN ALL SWING
BOLTS ARE ENGAGED AND
HOUSING IS EMPTY.
HOUSING MAT'LS = SS 304

MODEL #: HUR 16X170FL

Copyright Harmsco® Inc.
rev. 9/13